This Exploded Drawing is for Informational Purposes Only. No Technical Support or Installation Instructions are Available.
If you do not see the part you are looking for on our website, please email partsrequest@smallappliance.com for assistance.

KRUPS

EXPRESSO MAKER
ESPRESSO NOVO 2200 PLUS

FNC311(0) (120V-127V)

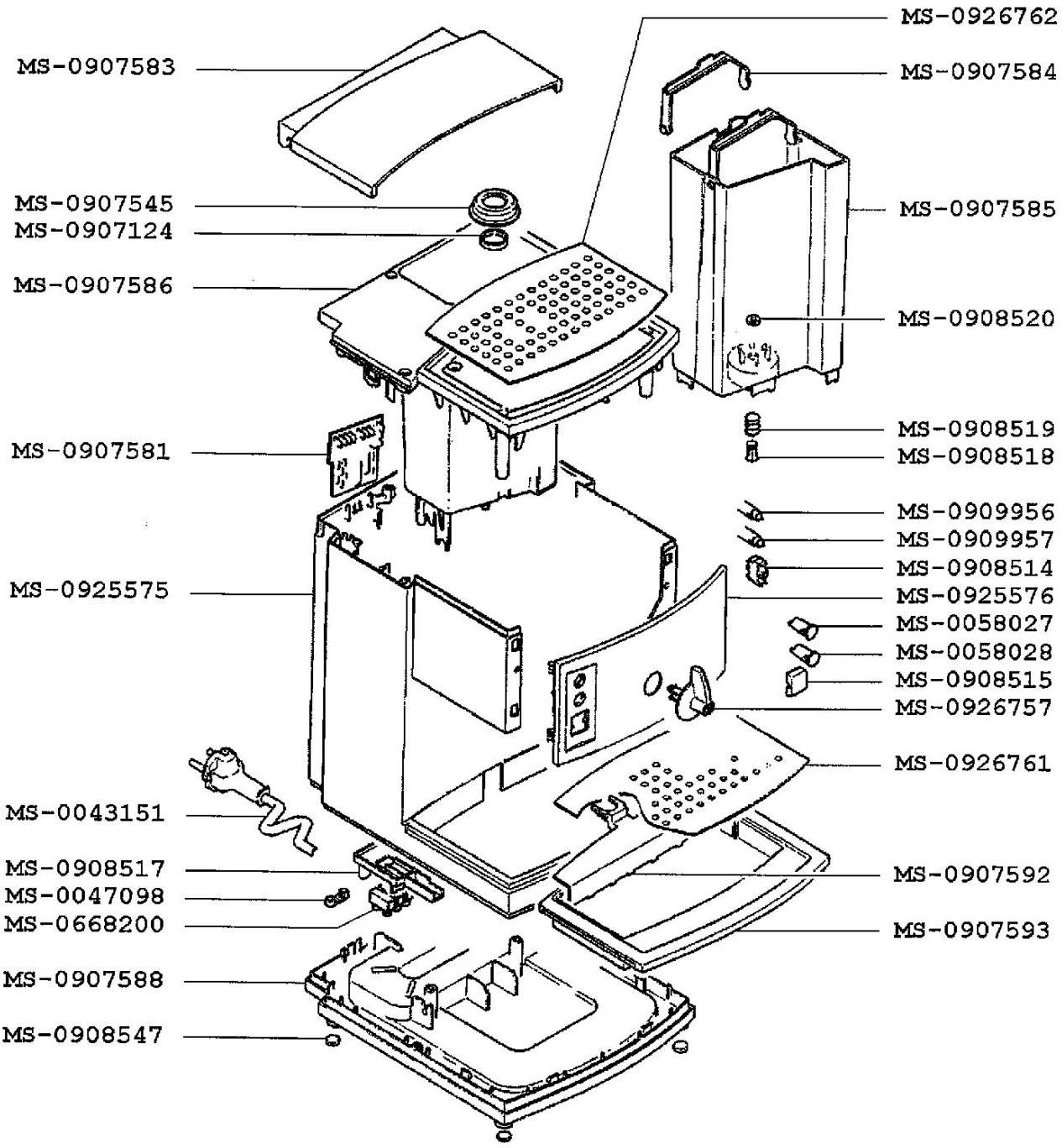

CREATION / EDIT		PAGE	COUNTRY	FAMILY
	12/1/2003	1/2	US	II

This Exploded Drawing is for Informational Purposes Only. No Technical Support or Installation Instructions are Available.
If you do not see the part you are looking for on our website, please email partsrequest@smallappliance.com for assistance.

KRUPS

EXPRESSO MAKER
ESPRESSO NOVO 2200 PLUS

FNC311(0) / (120V-127V)

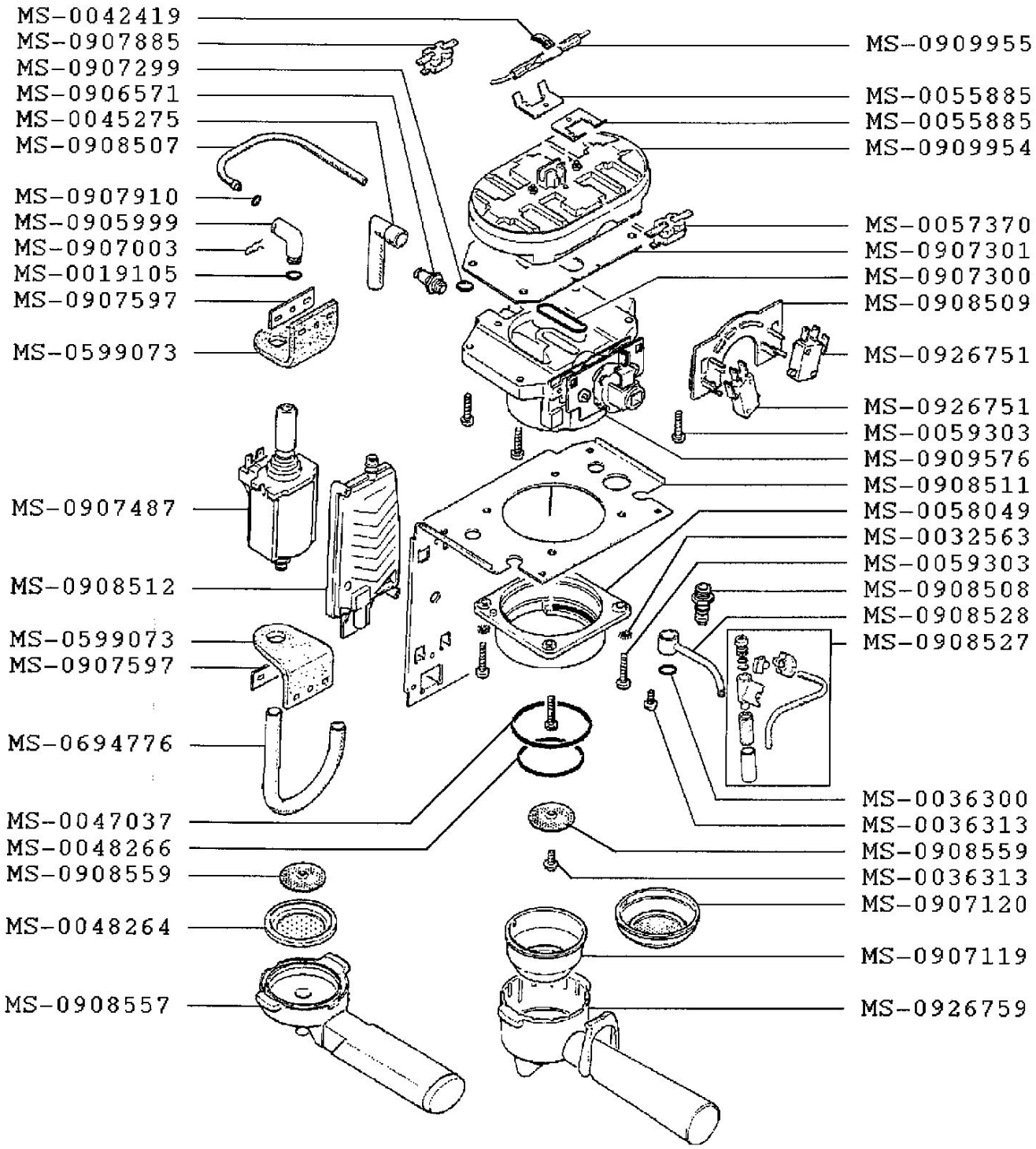

CREATION EDIT 12/1/2003	PAGE 2/2	COUNTRY US	FAMILY II