This Exploded Drawing is for Informational Purposes Only. No Technical Support or Installation Instructions are Available.
If you do not see the part you are looking for on our website, please email partsrequest@smallappliance.com for assistance.

BRAUN service

Braun GmbH

Service Documentation

Exploded Drawing
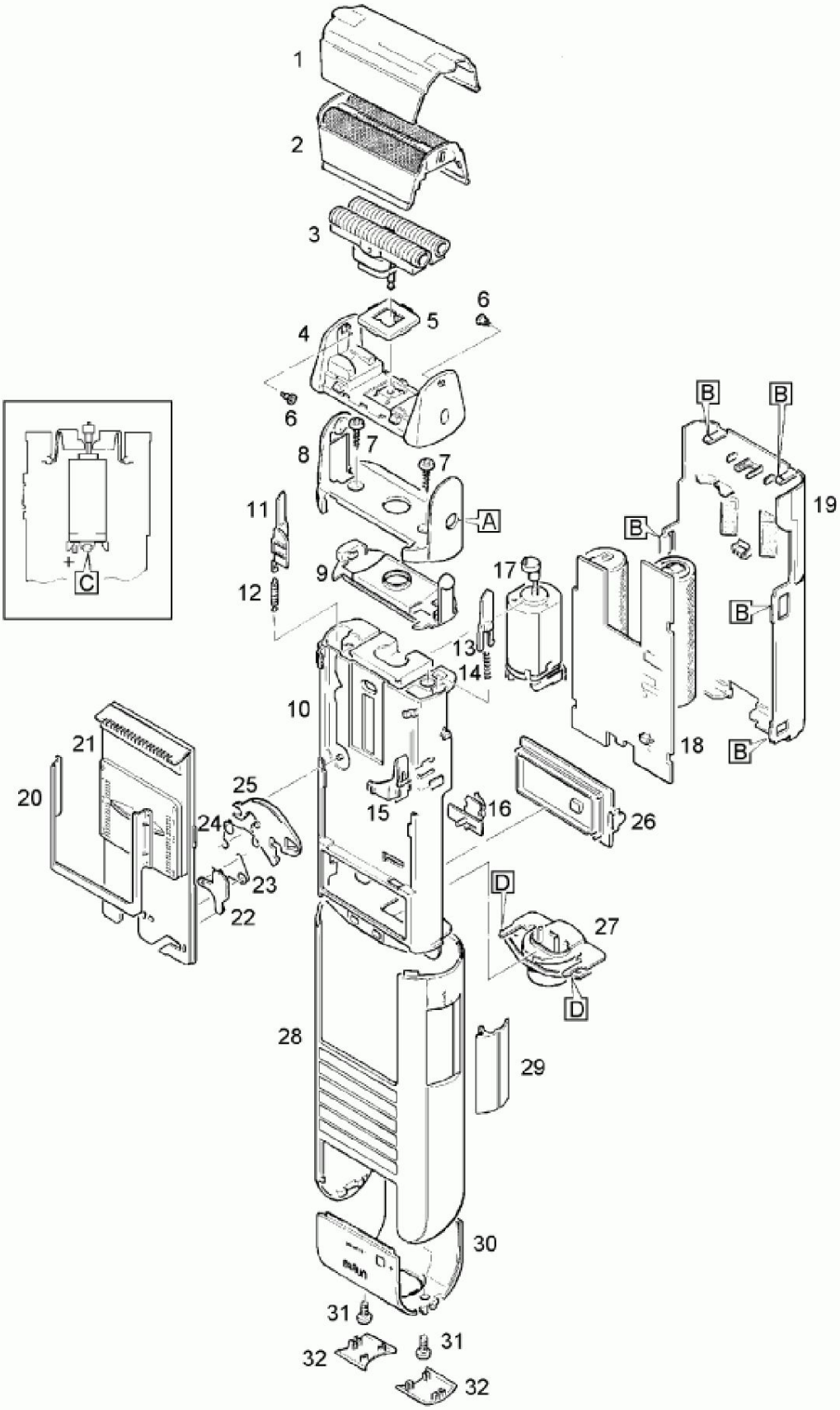
SH 5706