This Exploded Drawing is for Informational Purposes Only. No Technical Support or Installation Instructions are Available.
If you do not see the part you are looking for on our website, please email partsrequest@smallappliance.com for assistance.

KRUPS

CRYSTAL AROME TIME

TYPE: 458

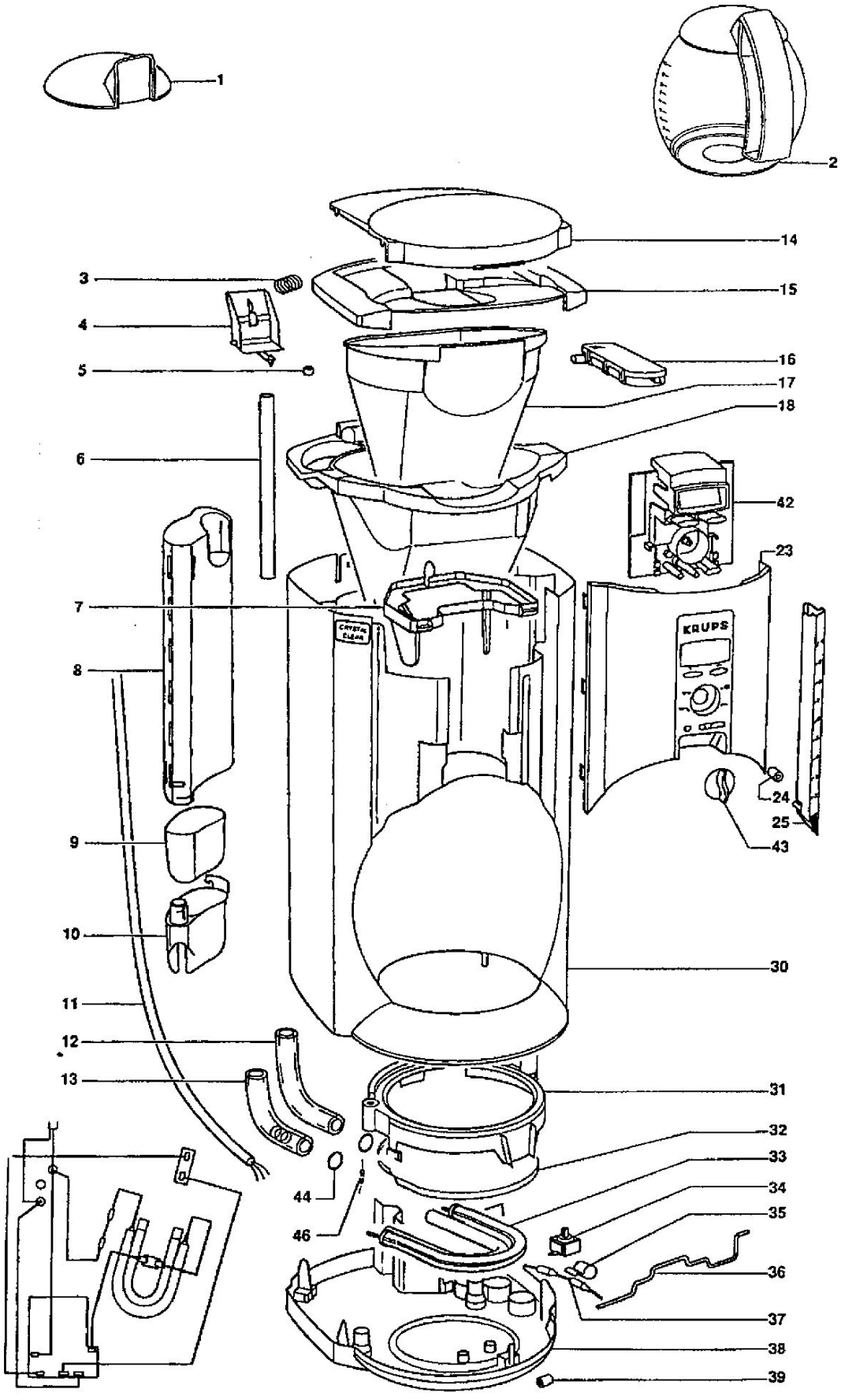

This Exploded Drawing is for Informational Purposes Only. No Technical Support or Installation Instructions are Available.
If you do not see the part you are looking for on our website, please email partsrequest@smallappliance.com for assistance.

KRUPS

CRYSTAL AROME TIME

TYPE: 458

REFERENCE #	PART #	DESCRIPTION
1	5894372	BLACK CARAFE LID
1	4894402	WHITE CARAFE LID
2	589-42	BLACK CARAFE
2	589-71	WHITE CARAFE
3	4894264	ELBOW SPRING
4	4894319	BLACK DRIP VALVE
5	0698285	DRIP VALVE SEAL
6	0694792	WATER GAUGE TUBE
7	4894276	BLACK LEVER
8	4894316	GREY FILTER SUPPORT HANDLE
9	590	CHARCOAL FILTERS (2)
10	4894317	GREY FILTER SUPPORT
11	0611117	BLACK POWER CORD
11	0611247	WHITE POWER CORD
12	0694793	SILICON ELBOW JOINT
13	0913566	SILICON TUBE ASSY.
14	5894368	BLACK COVER LID
14	4894397	WHITE COVER LID
15	5894367	BLACK LID
15	4894396	WHITE LID
16	5894371	BLACK PIPE
16	4894400	WHITE PIPE
17	5894370	BLACK FILTER BASKET
18	5894375	BLACK MAIN FILTER SUPPORT
18	4894406	WHITE MAIN FILTER SUPPORT
23	5894374	BLACK FASCIA
23	5894408	WHITE FASCIA
24	0698280	WATER LEVEL SEAL
25	5894280	WATER LEVEL TUBE
30	4894373	BLACK BODY
30	4894405	WHITE BODY
31	4894325	PLATE SUPPORT
32	4894314	HEATING PLATE
33	0295185	HEATING ELEMENT 120V/900W
34	0663373	THERMOSTAT
35	0599022	FUSE CLIP
36	0693203	CLAMP
37	0295816	FUSE 216/240C
38	5894365	BLACK BASE
38	4894394	WHITE BASE
39	4762034	RUBBER FOOT
42	5950955	BLACK PCB 120V
42	5835749	WHITE PCB 120V
43	5894333	BLACK CONTROL KNOB
43	5894404	WHITE CONTROL KNOB
44	0698209	SEAL