This Exploded Drawing is for Informational Purposes Only. No Technical Support or Installation Instructions are Available.
If you do not see the part you are looking for on our website, please email partsrequest@smallappliance.com for assistance.

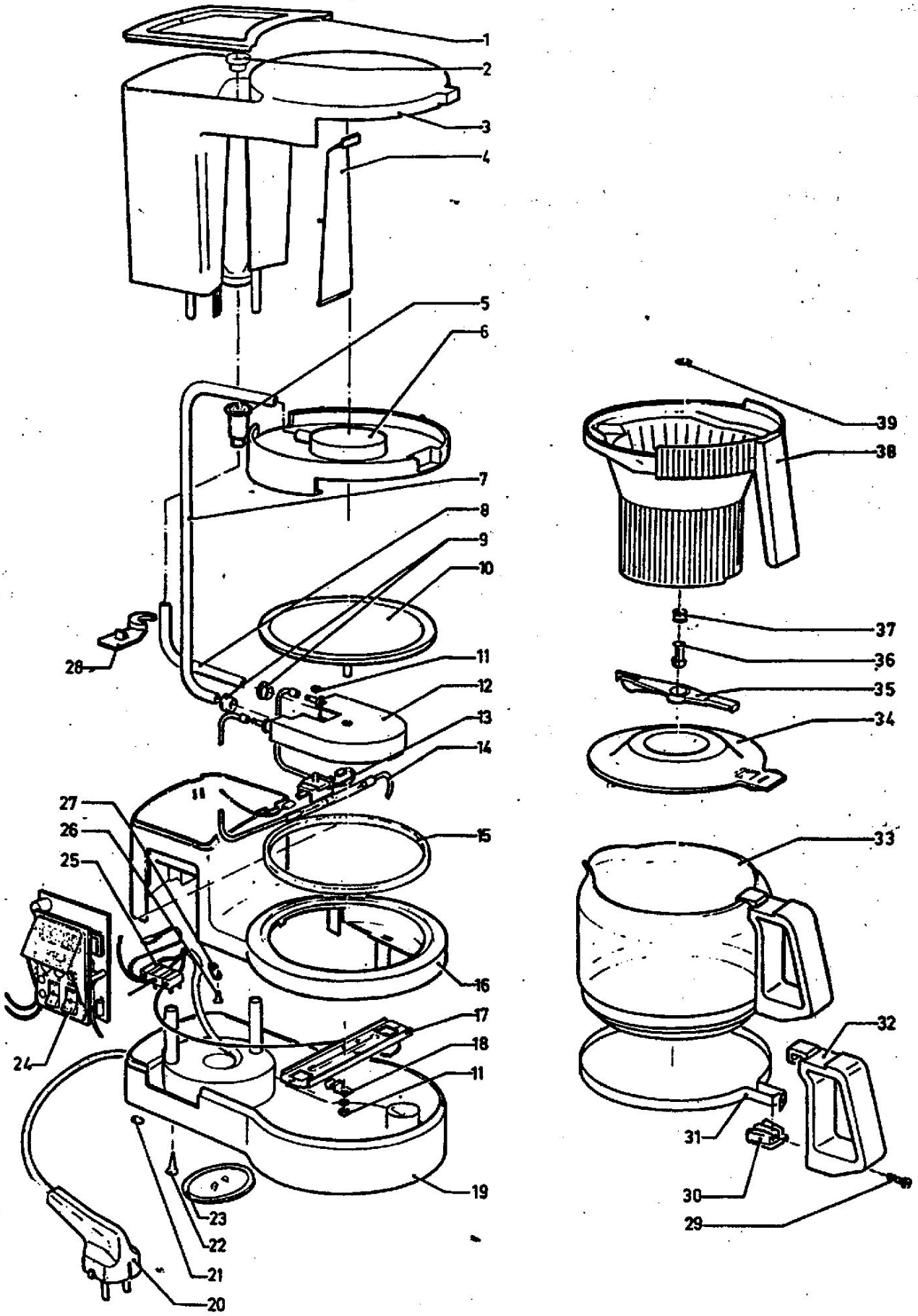

This Exploded Drawing is for Informational Purposes Only. No Technical Support or Installation Instructions are Available.
If you do not see the part you are looking for on our website, please email partsrequest@smallappliance.com for assistance.

C. NO.	PART NO.	DESCRIPTION	PR GR
01	29032	LID FOR WATER CONTAINER BLACK WASSERBEHAELTERDECKEL SCHWARZ	15
02	23135	CLAMP KLEMMBUCHSE	02 1
03	~~45165~~	~~WATER CONTAINER BLACK~~ WASSERBEHAELTER SCHWARZ	~~39~~
04	~~45166~~	~~COVER LEDGE BLACK~~ ABDECKLEISTE SCHWARZ	~~17~~
05	32753	VALVE CPL. VENTILAUFNAHME KPL.	23 1
06	43637	FILTER HOLDER CPL. BLACK FILTERAUFNAHME KPL. SCHWARZ	21
07	39180	WATER TUBE BENT WASSERROHR GEBOGEN	16
08	39184	WATER TUBE BENT WASSERROHR GEBOGEN	12
09	~~44371~~	SEAL 34088 short 37740 long DICHTBUCHSE	05
10	30443	HEATING PLATE CPL. WARMHALTEPLATTE KPL.	30
11	00004	HEXAGON NUT M4 SECHSKANTMUTTER M4	01
12	39352	HEATER ~~WITH FUSE~~ AND SWITCH WIRE CPL. HEIZER MIT BRANDS.UND ANSCHLUSSD. KPL.	42 1
13	~~41666~~	THERMOSTAT 41583 THERMOSTAT	31 1
14	~~34272~~	FUSE CPL. 40748 BRANDSICHERUNG KPL.	24 1
15	33149	SEAL DICHTRING	12
16	25181	BASE TOP WHITE SOCKEL OBERTEIL WEISS	36
16	29039	BASE TOP BLACK SOCKEL-OBERTEIL SCHWARZ	36
17	30442	CLAMP FOR HEATING ELEMENT BRUECKE	12
18	31206	RETAINING SHEET KLEMMBLECH	03
19	38584	BASE BOTTOM WHITE SOCKEL-UNTERTEIL WEISS	36
19	29040	BASE BOTTOM, BLACK SOCKELUNTERTEI, SCHWARZ	36
20	39508	MAINS CORD CPL. NETZSCHNUR KPL.	27
21	12346	SELFADHESIVE FOOT WHITE KLEBEFUSS WEISS	02
22	27954	SCREW 3,5X19 SCHRAUBE 3,5X19	02
23	44548	PLATE BLACK PLATTE SCHWARZ	07
24	33001	ELECTRONIC CLOCK CPL., 120V, 60HZ ELEKTRONIK UHR KPL. 120V, 60HZ	60
25	39671	TERMINAL CPL. LUESTERKLEMME KPL.	06

This Exploded Drawing is for Informational Purposes Only. No Technical Support or Installation Instructions are Available.
If you do not see the part you are looking for on our website, please email partsrequest@smallappliance.com for assistance.

.C. NO.	PART NO.	D E S C R I P T I O N	PR GR	
26	27952	LENTIL HEAD SCREW 3,5X13 SCHRAUBE M. KREUZSCHL.,3,5X13	02	
27	~~02574~~	~~CABLE COLLAR~~ KABELSCHELLE	~~01~~	
28	32026	CLAMP ROHRSCHELLE	05	
29	42139	SCREW 3,5X22 SCHRAUBE 3,5X22	02	
30	~~35197~~	~~TENSION PIECE, NEW~~ SPANNSTUECK, NEU	~~03~~	
31	~~35243~~	~~HANDLE BAND,NEW~~ GRIFFBAND, NEU	~~09~~	
32	45421	**********	28	
33	~~25614~~	JUG CPL., BROWN 035-33 GLASKRUG KPL, BRAUN	51	
33	~~45046~~	JUG CPL. WHITE 035-70 GLASKRUG KPL. WEISS	51	
34	29037	JUG COVER BLACK KRUGDECKEL SCHWARZ	19	
35	44545	CLOSURE LEVER BLACK VERSCHLUSSHEBEL SCHWARZ	06	
36	23121	FILTERCLOSURE FILTERVERSCHLUSS	03	
37	23123	COMPRESSION SPRING DRUCKFEDER	01	1
38	~~45420~~	FILTER CPL. 38902 brown 43633 white 43632 black FILTER KPL.	~~08~~	
39	23124	SEAL FOR FILTER FILTERDICHTUNG	02	1
	~~44543~~	~~SPOUT BLACK~~ AUSLAUF SCHWARZ	~~05~~	